YE -1 Total:

Power figures updated 31 Aug 05
Layout updated 31 Aug 05

power req W	heat dissipated W	380VAC current req A	230VAC current req A	385 VDC current req A
98093.4	32967.4	37.1	69.0	106.7

YE -1 Far Side:

	power req W	heat dissipated W	380VAC current req A	230VAC current req A	385 VDC current req A
					851.7
					851.7
	49046.7	16393.7	18.5	34.5	53.3
					0.0
					0.0
					0.0

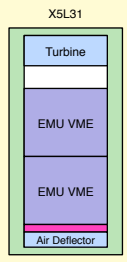

		X4S33	X4S32	X4S31
Power req	(W)	0.0	2568.0	10531.7
Heat dissipated	(W)	0.0	1380.0	3422.8
380 VAC current req.	(A)	0.0	3.9	2.1
230 VAC current req.	(A)	0.0	0.0	23.0
385 VDC current req.	(A)	0.0	0.0	0.0

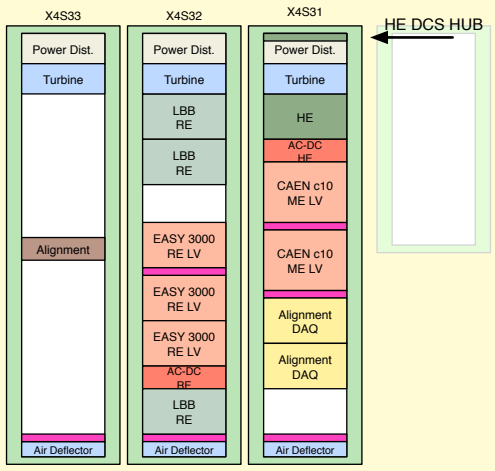

		X3S33	X3S32	X3S31
Power req	(W)	20538.2	5701.6	851.7
Heat dissipated	(W)	4313.0	1853.0	851.7
380 VAC current req.	(A)	0.0	8.7	0.0
230 VAC current req.	(A)	0.0	0.0	0.0
385 VDC current req.	(A)	53.3	0.0	0.0

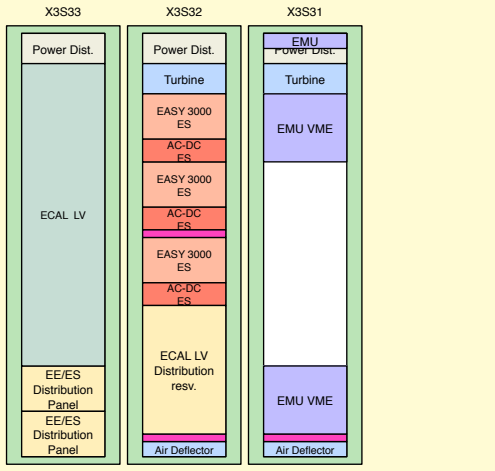

		X2S33	X2S32
Power req	(W)	4584.2	2568.0
Heat dissipated	(W)	1489.9	1380.0
380 VAC current req.	(A)	0.0	3.9
230 VAC current req.	(A)	11.5	0.0
385 VDC current req.	(A)	0.0	0.0

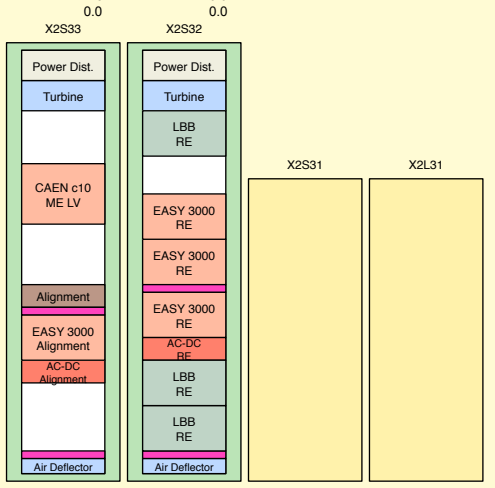

		X1L31
Power req	(W)	851.7
Heat dissipated	(W)	851.7
380 VAC current req.	(A)	0.0
230 VAC current req.	(A)	0.0
385 VDC current req.	(A)	0.0

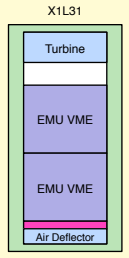

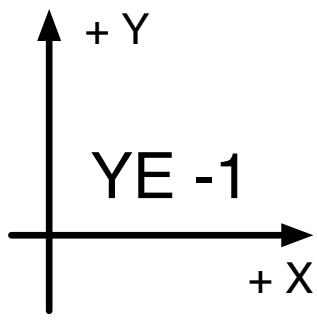

YE -1 Near Side:

	power req W	heat dissipated W	380VAC current req A	230VAC current req A	385 VDC current req A
					851.7
					851.7
	49046.7	16573.7	18.5	34.5	53.3
					0.0
					0.0
					0.0

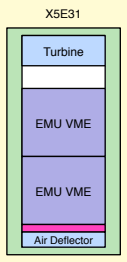

		X4V31	X4V32	X4V33
Power req	(W)	5947.6	2568.0	0.0
Heat dissipated	(W)	1933.0	1380.0	180.0
380 VAC current req.	(A)	2.1	3.9	0.0
230 VAC current req.	(A)	11.5	0.0	0.0
385 VDC current req.	(A)	0.0	0.0	0.0

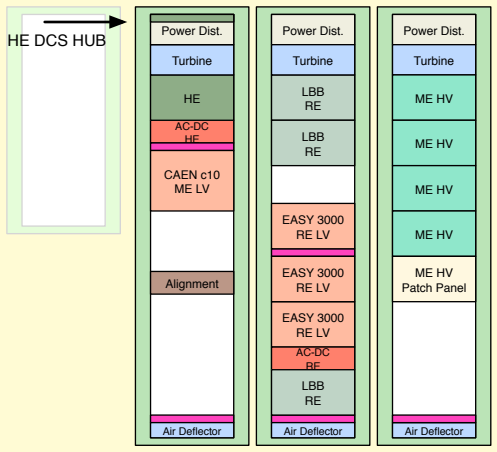

		X3V31	X3V32	X3V33
Power req	(W)	851.7	5701.6	20538.2
Heat dissipated	(W)	851.7	1853.0	4313.0
380 VAC current req.	(A)	0.0	8.7	0.0
230 VAC current req.	(A)	0.0	0.0	0.0
385 VDC current req.	(A)	0.0	0.0	53.3

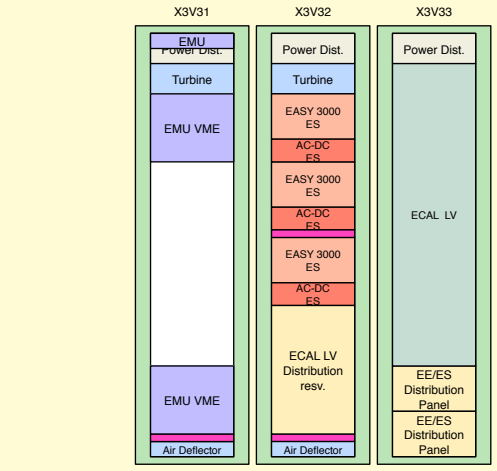

		X2V31	X2V32	X2V33
Power req	(W)	9168.3	2568.0	
Heat dissipated	(W)	2979.7	1380.0	
380 VAC current req.	(A)	0.0	3.9	
230 VAC current req.	(A)	23.0	0.0	
385 VDC current req.	(A)	0.0	0.0	

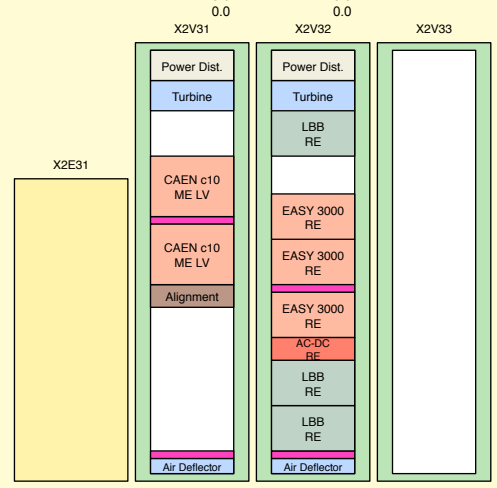

		X1E31
Power req	(W)	851.7
Heat dissipated	(W)	851.7
380 VAC current req.	(A)	0.0
230 VAC current req.	(A)	0.0
385 VDC current req.	(A)	0.0

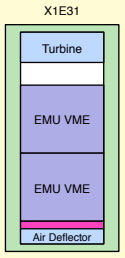

						106.4		62.9	
1	380 VAC	4x10 mm^2	RE	10	2.10	7.8	0.2	3.8	30
2	380 VAC	4x10 mm^2	ES	10	2.10	8.7	0.2	4.7	30
3	380 VAC	4x10 mm^2	HE	10	2.10	2.1	0.0	0.3	30
4	230 VAC	4x10 mm^2	ME	10	2.10	11.5	0.2	8.3	30
5	230 VAC	4x10 mm^2	ME	10	2.10	11.5	0.2	8.3	30
6	230 VAC	4x10 mm^2	ME	10	2.10	11.5	0.2	8.3	30
7	385VDC	10x6 mm^2	EE			22.7		12.2	33
		2x6 mm^2		10	3.55	8.0	0.3	4.5	
		2x6 mm^2		10	3.55	8.0	0.3	4.5	
		2x6 mm^2		10	3.55	6.7	0.2	3.2	
8	385 VDC	10x6 mm^2	EE			30.7		16.8	33
		2x6 mm^2		10	3.55	8.0	0.3	4.5	
		2x6 mm^2		10	3.55	8.0	0.3	4.5	
		2x6 mm^2		10	3.55	6.7	0.2	3.2	
		2x6 mm^2		10	3.55	8.0	0.3	4.5	

Patch Panels

Only YE-1 cables shown

						106.4		62.9	
1	380 VAC	4x10 mm^2	RE	10	2.10	7.8	0.2	3.8	30
2	380 VAC	4x10 mm^2	ES	10	2.10	8.7	0.2	4.7	30
3	380 VAC	4x10 mm^2	HE	10	2.10	2.1	0.0	0.3	30
4	230 VAC	4x10 mm^2	ME	10	2.10	11.5	0.2	8.3	30
5	230 VAC	4x10 mm^2	ME	10	2.10	11.5	0.2	8.3	30
6	230 VAC	4x10 mm^2	ME	10	2.10	11.5	0.2	8.3	30
7	385VDC	10x6 mm^2	EE			22.7		12.2	33
		2x6 mm^2		10	3.55	8.0	0.3	4.5	
		2x6 mm^2		10	3.55	8.0	0.3	4.5	
		2x6 mm^2		10	3.55	6.7	0.2	3.2	
8	385 VDC	10x6 mm^2	EE			30.7		16.8	33
		2x6 mm^2		10	3.55	8.0	0.3	4.5	
		2x6 mm^2		10	3.55	8.0	0.3	4.5	
		2x6 mm^2		10	3.55	6.7	0.2	3.2	
		2x6 mm^2		10	3.55	8.0	0.3	4.5	