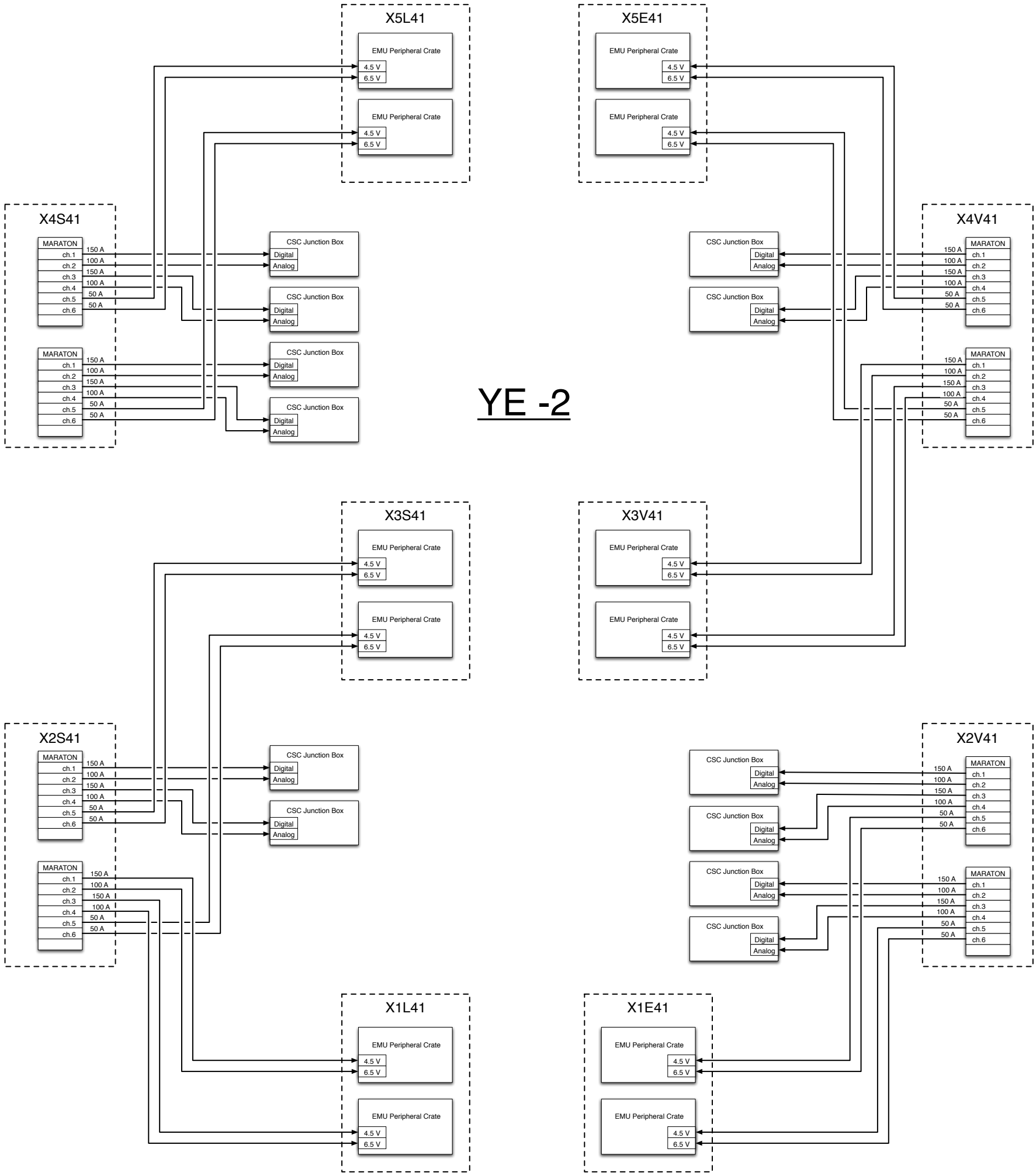
YE -2
X5L41
EMU Peripheral Crate
4.5 V
6.5 V
EMU Peripheral Crate
4.5 V
6.5 V
X5E41
EMU Peripheral Crate
4.5 V
6.5 V
EMU Peripheral Crate
4.5 V
6.5 V
X4S41
MARATON
ch.1
ch.2
ch.3
ch.4
ch.5
ch.6
150 A
100 A
150 A
100 A
50 A
50 A
MARATON
ch.1
ch.2
ch.3
ch.4
ch.5
ch.6
150 A
100 A
150 A
100 A
50 A
50 A
CSC Junction Box
Digital
Analog
CSC Junction Box
Digital
Analog
CSC Junction Box
Digital
Analog
CSC Junction Box
Digital
Analog
X4V41
MARATON
ch.1
ch.2
ch.3
ch.4
ch.5
ch.6
150 A
100 A
150 A
100 A
50 A
50 A
MARATON
ch.1
ch.2
ch.3
ch.4
ch.5
ch.6
150 A
100 A
150 A
100 A
50 A
50 A
CSC Junction Box
Digital
Analog
CSC Junction Box
Digital
Analog
X3S41
EMU Peripheral Crate
4.5 V
6.5 V
EMU Peripheral Crate
4.5 V
6.5 V
X3V41
EMU Peripheral Crate
4.5 V
6.5 V
EMU Peripheral Crate
4.5 V
6.5 V
X2S41
MARATON
ch.1
ch.2
ch.3
ch.4
ch.5
ch.6
150 A
100 A
150 A
100 A
50 A
50 A
MARATON
ch.1
ch.2
ch.3
ch.4
ch.5
ch.6
150 A
100 A
150 A
100 A
50 A
50 A
CSC Junction Box
Digital
Analog
CSC Junction Box
Digital
Analog
X2V41
MARATON
ch.1
ch.2
ch.3
ch.4
ch.5
ch.6
150 A
100 A
150 A
100 A
50 A
50 A
MARATON
ch.1
ch.2
ch.3
ch.4
ch.5
ch.6
150 A
100 A
150 A
100 A
50 A
50 A
CSC Junction Box
Digital
Analog
CSC Junction Box
Digital
Analog
CSC Junction Box
Digital
Analog
CSC Junction Box
Digital
Analog
X1L41
EMU Peripheral Crate
4.5 V
6.5 V
EMU Peripheral Crate
4.5 V
6.5 V
X1E41
EMU Peripheral Crate
4.5 V
6.5 V
EMU Peripheral Crate
4.5 V
6.5 V